Available online at www.sciencedirect.com

ScienceDirect

Procedia Structural Integrity 37 (2022) 314–320

Structural Integrity Procedia

www.elsevier.com/locate/procedia

ICSI 2021 The 4th International Conference on Structural Integrity

3D simulation models for developing digital twins of heritage structures: challenges and strategies

Amirhosein Shabani[a,*], Margarita Skamantzari[b], Sevasti Tapinaki[b], Andreas Georgopoulos[b], Vagelis Plevris[c], Mahdi Kioumarsi[a]

[a]*Department of Civil Engineering and Energy Technology, Oslo Metropolitan University, Pilestredet 35, 0166 Oslo, Norway*
[b]*Laboratory of Photogrammetry, School of Rural and Surveying Engineering, National Technical University of Athens, Greece*
[c]*Department of Civil and Architectural Engineering, Qatar University, Doha, Qatar*

Abstract

Structural vulnerability assessment of heritage structures is a pivotal part of a risk mitigation strategy for preserving these valuable assets for the nations. For this purpose, developing digital twins has gained much attention lately to provide an accurate digital model for performing finite element (FE) analyses. Three-dimensional (3D) geometric documentation is the first step in developing the digital twin, and various equipment and methodologies have been developed to facilitate the procedure. Both aerial and terrestrial close-range photogrammetry can be combined with 3D laser scanning and geodetic methods for the accurate 3D geometric documentation. The data processing procedure in these cases mostly focuses on developing detailed, accurate 3D models that can be used for the FE modeling. The final 3D surface or volumes are produced mainly by combining the 3D point clouds obtained from the laser scanner and the photogrammetric methods. 3D FE models can be developed based on the geometries derived from the 3D models using FE software packages. As an alternative, developed 3D volumes provided in the previous step can be directly imported to some FE software packages. In this study, the challenges and strategies of each step are investigated by providing examples of surveyed heritage structures.

© 2022 The Authors. Published by Elsevier B.V.
This is an open access article under the CC BY-NC-ND license (https://creativecommons.org/licenses/by-nc-nd/4.0)
Peer-review under responsibility of Pedro Miguel Guimaraes Pires Moreira

Keywords: 3D geometric documentation; cultural heritage; digital twins; 3D laser scanner; photogrammetry; finite element model

* Corresponding author. Tel.: +47- 67237972.
E-mail address: amirhose@oslomet.no

2452-3216 © 2022 The Authors. Published by Elsevier B.V.
This is an open access article under the CC BY-NC-ND license (https://creativecommons.org/licenses/by-nc-nd/4.0)
Peer-review under responsibility of Pedro Miguel Guimaraes Pires Moreira
10.1016/j.prostr.2022.01.090

1. Introduction

Heritage structures are important evidence of our civilizations that should be preserved with the most advanced available tools as stated by Shabani et al. (2020). The possibility of developing accurate enough digital simulation models where damage could be predicted would indeed help the restoration process of historic structures, as stated by Angjeliu et al. (2020), and Shabani, Hosamo, et al. (2021). Geometrical survey and providing more refined 3D numerical models of cultural heritage (CH) assets are the pivotal steps of developing digital twins' procedure, as pointed out by Korumaz et al. (2017) and Shabani, Kioumarsi, et al. (2021).

The interest in the documentation and enhancement of CH has been rising rapidly over the last decades, especially due to the significant technological advances that can contribute to its protection and promotion. Nowadays, many researchers explore different methods for documentation, management, and sustainability of CH, which have become an interdisciplinary approach to the development of the culture, as presented by Tobiasz et al. (2019). Digitization of CH assets and sites is a broad term that includes quantitative as well as qualitative data acquisition, as stated by Georgopoulos & Stathopoulou (2017). Within the photogrammetric, computer vision, and robotics communities, various techniques for 2D, 3D, even 4D data acquisition and digitization have been developed during the past years. CH assets are still a challenging object due to the complexity of their shape, the variety of their types, the high accuracy requirements, and the heterogeneity of the end-users.

After performing the geometrical survey and providing the documentation, developing 3D simulation models is the next step for obtaining the more refined digital twins. Traditionally 3D FE models can be developed in FE analysis software packages based on the geometric documentation as employed by Bartoli et al. (2016), but recently automatically or semi-automatically conversion methodologies of the geometric documentation such as point clouds to 3D FE models are gaining attention, as stated by Panah & Kioumarsi (2021) and utilized by Castellazzi et al. (2015), Castellazzi et al. (2017), and Bartoli et al. (2020). Obtaining 3D models in computer-aided (CAD) software packages based on point clouds and importing them to 3D FE models in some of the FE analysis software packages (i.e., DIANA (2020), MIDAS (2021)) is a conventional method that is used by Pepi et al. (2021) and Kassotakis & Sarhosis (2021).

This study presents a holistic methodology for 3D documentation of cultural heritage assets through geodetic, photogrammetric, and laser scanning data acquisition and post-processing methods. The 3D textured models, light 3D models, and cross-sections are the products of the workflow, and their applications are investigated. Furthermore, two methodologies for developing the 3D FE models were applied to two CH assets. Firstly, the FE model of the Roman bridge in Rhodes island in Greece was developed using the dimensions derived from the 3D documentation in FE software. Afterward, the developing procedure of the 3D FEM of the Slottsfjel tower (Slottsfjelltårnet) in Tønsberg, in Norway, is discussed. For making the 3D FE model of the tower, instead of modeling the structure in FE software, the 3D model was developed in 3D modeling software based on the point clouds and then imported to FE software and refined for meshing and performing the FE analysis. Furthermore, challenges and strategies through the presented procedures have been discussed.

2. 3D geometric documentation

This study focuses on the 3D geometric documentation of CH buildings of different historic areas and places around Europe, in order to provide the necessary products for the vulnerability assessment of the structures, the holistic approach of CH, and the development of digital twins. For the initial 3D modeling and representation of the CH buildings, the combination of geodetic, photogrammetric, and laser scanning data acquisition and processing methods have been applied, as discussed by Kolokoussis et al. (2021).

Digital images were acquired in different ways according to the size, complexity, level of detail, and restrictions of each monument using both high-resolution full-frame cameras and Unmanned Aircraft Systems (UAS) with low-resolution multispectral cameras. The data acquisition process using the UAS can be challenging or even impossible to achieve due to several restrictions. The weather conditions may not make it possible to plan and execute a flight, the vegetation and terrain may also pose restrictions since the aircraft is not able to fly near any obstacles and high trees may cover the CH buildings leading to a lack of information. Other parameters that should be taken into consideration are the flight time limitation of the UAS and mostly the flight restrictions applied by each country, and the no-fly zones. In order to overcome these restrictions, other methods were applied, such as acquiring the digital

images with either hand-held cameras or with cameras mounted to a 9-meter-high photographic pole. Moreover, terrestrial laser scanning has been conducted to accurately determine the surface of the structures and provide completeness to the point clouds. A local reference coordinate system was set up at each area to conduct the necessary measurements with the minimum constraints in order to avoid the deformations of the shape or size of each monument due to the projection.

The standard workflow was followed to process the acquired data as in every documentation process. First, the digital images were processed using an Image Based Modeling (IBM) software package, where the dense point clouds were generated and further processed. Then the scanned point clouds were registered, georeferenced, and further processed to reduce inevitable scanner errors in order to lead to a smoother and more accurate 3D model. Finally, the dense point clouds from the IBM software were used to fill eventual gaps in the scans and generate the final point cloud for each CH building. Each point object was converted to a polygon object using the triangulated irregular network (TIN) method for the representation. The whole procedure of developing the 3D model is presented in Fig. 1.

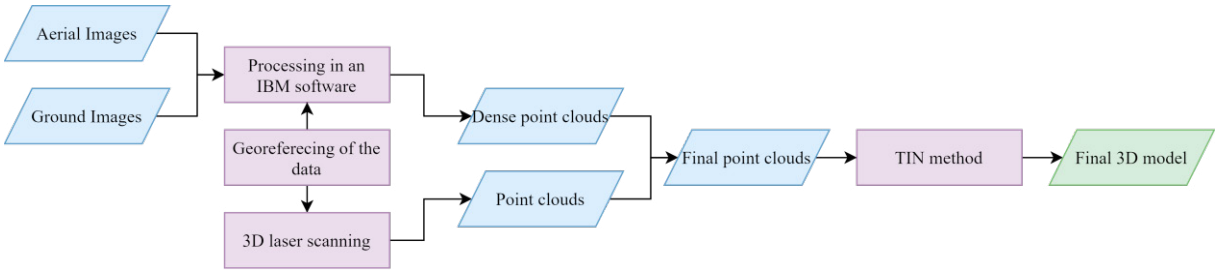

Fig. 1. Workflow of the holistic methodology for developing 3D models of the CH assets.

The development of the integrated and accurate 3D models was imperative because these models were used for the production of all other necessary products, such as 3D textured models, light 3D models, vertical and horizontal cross-sections etc. The 3D textured models (see Fig. 2. (a)) were primarily used to identify and map the various materials at each CH building, while they were also combined with Hyperspectral images in order to detect the material loss and pathology. The light 3D models, as illustrated in Fig. 2. (b) were developed for visualization purposes and were decimated for this reason. Finally, the cross-sections (see Fig. 2. (c)) were necessary for the 3D finite element modeling as well as the production of 2D vector drawings.

(a) (b) (c)

Fig. 2. (a) 3D textured models; (b) Light 3D model of the Nailac tower in Rhodes, Greece; (c) Cross section of the Roman bridge in Rhodes, Greece.

3. 3D finite element modeling

Masonry is composed of units and joints. The micro modeling approach is considered as the most detailed modeling strategy in which masonry units and mortar joints are simulated and connected via the interface elements. In the

simplified micro modeling approach, the units are expanded modeled (unit and half of the thickness of the mortar) and connected with interface elements by neglecting to model the mortar element independently. The macro modeling approach is considered as the third strategy that all the components are modeled as a homogenized and composite material. FE modeling of complex, full-scale structures considering homogenized material for masonry is widely used for structural vulnerability assessment of architectural heritage assets as highlighted by D'Altri et al. (2020), which is also utilized for 3D modeling of the case studies in this paper. Lower computational effort and lower input data are the two main advantages of this modeling strategy compared to micro modeling methods. However, micro modeling approaches provide more accurate results that can be more representative of the actual behavior of masonry, as stated by Ferreira et al. (2019).

As a traditional way, geometrical documentation of a structure is provided, and the FEM is developed for the Roman bridge case study in Rhodes, Greece as illustrated in Fig. 3. (a). The 3D FE model of the stone masonry bridge is composed of backfill soil, spandrel walls, arches, and parapets as depicted in Fig. 3. (b) and presented by Sarhosis et al. (2016).

(a)

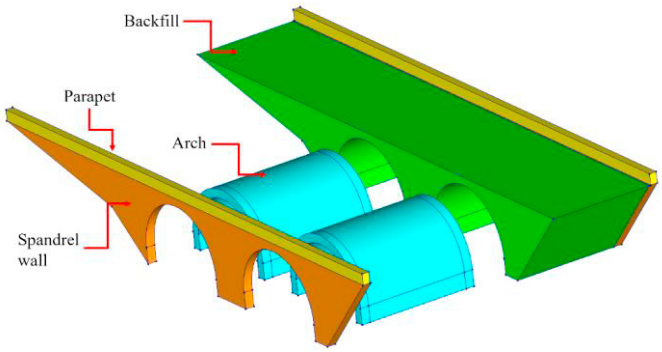

(b)

Fig. 3. (a) The Roman bridge in Rhodes, Greece; (b) Different parts of the 3D FE model of the bridge.

Two plane interface element types are utilized in the model. Firstly, for the boundary conditions, a plane interface element is utilized with high stiffness in normal and lateral directions and zero stiffness in tension, as stated by Gönen & Soyöz (2021). Another interface contact element is employed to simulate the connectivity of the backfill soil and the masonry sections (spandrel walls and arches). This interface element is modeled with a tension cut-off strategy to simulate the zero stiffness in tension, and high stiffness values are considered for normal and lateral directions as employed by Gönen & Soyöz (2021). A high normal stiffness value should be implemented to avoid overlapping of the backfill soil and the masonry structural media (interpenetration of interface element nodes).

If a connection is defined for a particular shape part, DIANA (2020) interprets that shape part to be disconnected from all other shape parts unless explicitly defined. It should be noted that by modeling interface elements if three elements are connected, as illustrated in Fig. 2. (a), three sets of nodes exist at the connection location. Two sets are connected with the interface elements and another node set is disconnected. Therefore, as illustrated in Fig.4. (a), the disconnected faces must be tied together by means of unite connections. Unite connections are utilized to connect the arch and spandrel sections where three sets of coincident nodes exist due to modeling the interface elements to connect

backfill soil and the masonry parts. Adaptive mesh size of 0.5 m is considered, and FE mesh of the bridge is illustrated in Fig. 4. (b).

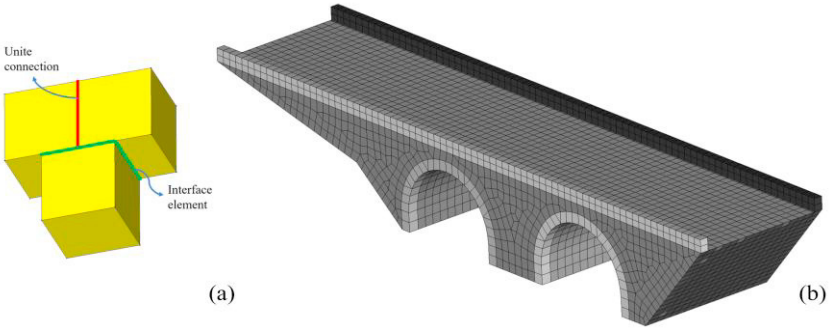

Fig. 4. (a) An example of the assembly of the interface elements and unite connection; (b) 3D mesh of the Roman bridge.

Developing 3D models in a CAD software package is more accurate than the previous method employed for 3D FE modeling of the Slottsfjell tower in Tønsberg, Norway, as shown in Fig. 5. (a). To perform the geometrical survey, a Topcon 2000 3D laser scanner was utilized. Twenty scans were performed inside and outside of the tower to provide the 3D point clouds. Point clouds were imported to the ReCap (2021) software and were merged to provide the 3D dense point clouds, as illustrated in Fig. 5. (b). Afterward, the 3D dense point cloud file was imported to Revit (2021) software package as depicted in Fig. 5. (c) and a 3D model of the tower was developed in the versatile environment of Revit software as shown in Fig.5. (d). Note that for this case study, the digital images were not provided, and the 3D model was developed based on the 3D point clouds from the laser scanners.

(a) (b) (c) (d)

Fig. 5. (a) The Slottsfjel tower in Tønsberg, Norway; (b) 3D dense point clouds in Recap software; (c) Imported 3D point cloud to Revit software; (d) Developed 3D model of the tower in Revit software.

To develop the 3D FEM of the tower, the industry foundation classes (IFC) format of the 3D model was exported, and by means of the CAD exchanger software, the IFC format file was converted to the standard for the exchange of product model data (STEP) format which is suitable for importing 3D models with solid elements in DIANA (2020) software. Imported CAD files may need to be repaired before generating mesh as discussed by Ademi (2020). There are (unintended) small entities, small edges, duplicate curves, and surfaces, for example, in a model that makes generating high-quality mesh difficult or even impossible. Three tools are available to remove small entities, clean and optimize the geometric model in DIANA (2020). The cleaning tool was utilized to find and repair the shapes, including self-intersecting surfaces, small edges, discontinuities, etc. The geometry was simplified by means of the optimization tool. Edge inaccuracies were healed, duplicate curves and surfaces, and redundant edges and vertices

were removed. Furthermore, small entities such as small faces, silver faces (a face with a high aspect ratio and a small area), gashes (a gash is a set of connected laminar edges where each edge is within the tolerance of the other edges in the set) etc. were removed using the removal of small entities tool. Fig.6. (a) and (b) show the imported STEP file to the DIANA (2020) software before and after healing, and Fig. 6. (c) depicts the FEM mesh of the tower with a maximum mesh size of 0.2 m. Furthermore, the procedure of converting the point clouds derived from the 3D laser scanners to the 3D FEM is illustrated in Fig. 7.

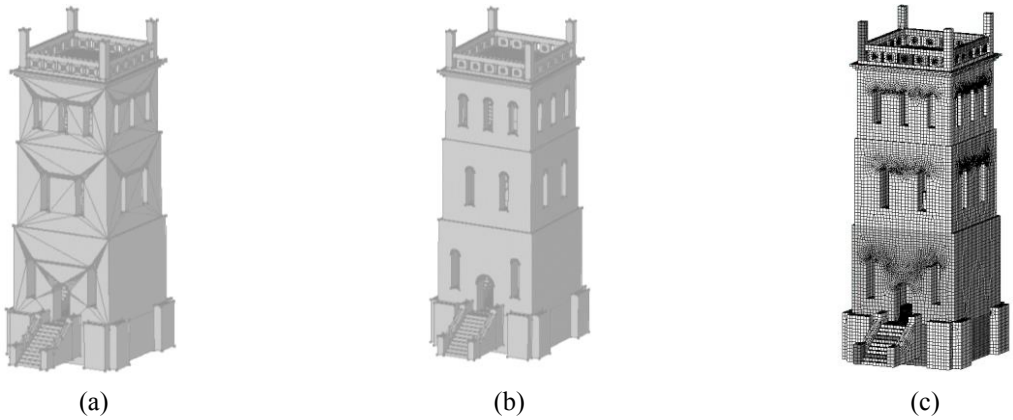

Fig. 6. (a) Imported 3D model in DIANA software; (b) Modified 3D FE model of the Tower; (c) 3D mesh of the tower model.

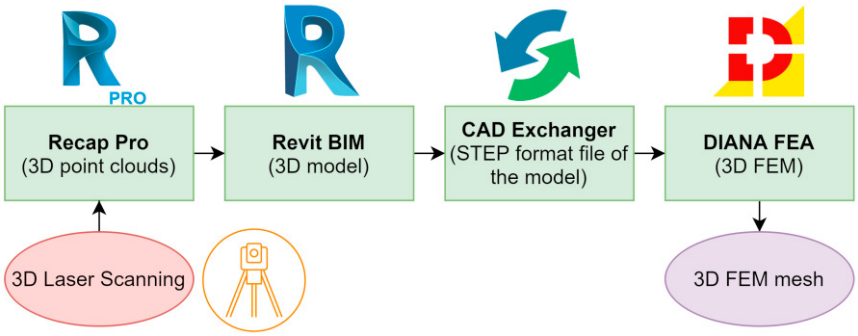

Fig. 7. The workflow utilized for converting the point clouds derived from the 3D laser scanners to the 3D mesh of the FE model.

4. Conclusion

A holistic methodology is presented in this paper for providing 3D documentation of CH assets. Digital images composing aerial and ground images are imported to IBM software to be processed, and laser scanners are utilized to provide the point clouds. Georeferencing of data is carried out to avoid the deformations of the shape or size of each monument due to the projection for both sets of data. Afterward, 3D dense point clouds from the digital images are processed with the point clouds from the scanners to fill the possible gaps and developing the final 3D point clouds. 3D models are then provided by means of the TIN method. 3D textured models, light 3D models, vertical and horizontal cross-sections are the production of the 3D models in the previous step. FE modeling of two CH assets is investigated so that for the Roman bridge, 3D FE models were made in FE software utilizing the dimensions derived from the light 3D models or the cross-sections. However, in a more efficient way, the 3D model of the Slottsfjel tower was developed in CAD software based on the point clouds and then imported to the DIANA software. Various tools exist in the DIANA software to clean, simplify, and modify the imported STEP format files used to prepare the 3D FE model of the tower. The procedure utilized for making the 3D FE model of the tower is more efficient and accurate compared to the traditional procure utilized for the bridge. Moreover, the methodology is recommended for developing the digital twin of CH assets with complex architecture.

Acknowledgements

This work is a part of the HYPERION project. HYPERION has received funding from the European Union's Framework Programme for Research and Innovation (Horizon 2020) under grant agreement No 821054. The contents of this publication are the sole responsibility of OsloMet and NTUA and do not necessarily reflect the opinion of the European Union.

References

Ademi, A. (2020). *Finite element model updating of a stone masonry tower using 3D laser scanner and accelerometers.* (Master of Science Thesis). Oslo Metropolitan University, Oslo, Norway.

Angjeliu, G., Coronelli, D., & Cardani, G., 2020. Development of the simulation model for Digital Twin applications in historical masonry buildings: The integration between numerical and experimental reality. Computers & Structures, 238, 106282. doi:https://doi.org/10.1016/j.compstruc.2020.106282

Bartoli, G., Betti, M., Bonora, V., Conti, A., Fiorini, L., Kovacevic, V. C., Tesi, V., & Tucci, G., 2020. From TLS data to FE model: a workflow for studying the dynamic behavior of the Pulpit by Giovanni Pisano in Pistoia (Italy). Procedia Structural Integrity, 29, 55-62. doi:https://doi.org/10.1016/j.prostr.2020.11.139

Bartoli, G., Betti, M., & Vignoli, A., 2016. A numerical study on seismic risk assessment of historic masonry towers: a case study in San Gimignano. Bulletin of Earthquake Engineering, 14(6), 1475-1518. doi:10.1007/s10518-016-9892-9

Castellazzi, G., Altri, A. M., Bitelli, G., Selvaggi, I., & Lambertini, A., 2015. From Laser Scanning to Finite Element Analysis of Complex Buildings by Using a Semi-Automatic Procedure. Sensors, 15(8). doi:https://doi.org/10.3390/s150818360

Castellazzi, G., D'Altri, A. M., de Miranda, S., & Ubertini, F., 2017. An innovative numerical modeling strategy for the structural analysis of historical monumental buildings. Engineering Structures, 132, 229-248. doi:https://doi.org/10.1016/j.engstruct.2016.11.032

D'Altri, A. M., Sarhosis, V., Milani, G., Rots, J., Cattari, S., Lagomarsino, S., Sacco, E., Tralli, A., Castellazzi, G., & de Miranda, S., 2020. Modeling Strategies for the Computational Analysis of Unreinforced Masonry Structures: Review and Classification. Archives of Computational Methods in Engineering, 27(4), 1153-1185. doi:10.1007/s11831-019-09351-x

DIANA. 2020. DIANA FEA, Diana User's Manual, Release 10.4. In DIANA FEA BV, Delft University of Technology, Netherland.

Ferreira, T. M., Mendes, N., & Silva, R., 2019. Multiscale Seismic Vulnerability Assessment and Retrofit of Existing Masonry Buildings. Buildings, 9(4), 91. Retrieved from https://www.mdpi.com/2075-5309/9/4/91

Georgopoulos, A., & Stathopoulou, E. K., 2017. Data acquisition for 3D geometric recording: state of the art and recent innovations. Heritage and archaeology in the digital age, 1-26.

Gönen, S., & Soyöz, S., 2021. Seismic analysis of a masonry arch bridge using multiple methodologies. Engineering Structures, 226, 111354. doi:https://doi.org/10.1016/j.engstruct.2020.111354

Kassotakis, N., & Sarhosis, V., 2021. Employing non-contact sensing techniques for improving efficiency and automation in numerical modelling of existing masonry structures: A critical literature review. Structures, 32, 1777-1797. doi:https://doi.org/10.1016/j.istruc.2021.03.111

Kolokoussis, P., Skamantzari, M., Tapinaki, S., Karathanassi, V., & Georgopoulos, A., 2021. D and Hyperspectral Data Integration for Assessing Material Degradation in Medieval Masonry Heritage Buildings. ISPRS-International Archives of the Photogrammetry, Remote Sensing and Spatial Information Sciences, 43, 583-590.

Korumaz, M., Betti, M., Conti, A., Tucci, G., Bartoli, G., Bonora, V., Korumaz, A. G., & Fiorini, L., 2017. An integrated Terrestrial Laser Scanner (TLS), Deviation Analysis (DA) and Finite Element (FE) approach for health assessment of historical structures. A minaret case study. Engineering Structures, 153, 224-238. doi:https://doi.org/10.1016/j.engstruct.2017.10.026

MIDAS. 2021. MIDASoft, Inc. New York, United States. In.

Panah, R. S., & Kioumarsi, M., 2021. Application of Building Information Modelling (BIM) in the Health Monitoring and Maintenance Process: A Systematic Review. Sensors, 21(3), 837. Retrieved from https://www.mdpi.com/1424-8220/21/3/837

Pepi, C., Cavalagli, N., Gusella, V., & Gioffrè, M., 2021. An integrated approach for the numerical modeling of severely damaged historic structures: Application to a masonry bridge. Advances in Engineering Software, 151, 102935. doi:https://doi.org/10.1016/j.advengsoft.2020.102935

ReCap. 2021. Autodesk, ReCap Pro, California, U.S. In.

Revit. 2021. Autodesk, Revit BIM (Building Information Modeling), California, U.S. In.

Sarhosis, V., De Santis, S., & de Felice, G., 2016. A review of experimental investigations and assessment methods for masonry arch bridges. Structure and Infrastructure Engineering, 12(11), 1439-1464.

Shabani, A., Hosamo, H., Plevris, V., & Kioumarsi, M., 2021. A Preliminary Structural Survey of Heritage Timber Log Houses in Tønsberg, Norway. Paper presented at the 12th International Conference on Structural Analysis of Historical Constructions (SAHC 2021), Spain.

Shabani, A., Kioumarsi, M., Plevris, V., & Stamatopoulos, H., 2020. Structural Vulnerability Assessment of Heritage Timber Buildings: A Methodological Proposal. Forests, 11(8), 881. doi:https://doi.org/10.3390/f11080881

Shabani, A., Kioumarsi, M., & Zucconi, M., 2021. State of the art of simplified analytical methods for seismic vulnerability assessment of unreinforced masonry buildings. Engineering Structures, 239, 112280. doi:https://doi.org/10.1016/j.engstruct.2021.112280

Tobiasz, A., Markiewicz, J., Łapiński, S., Nikel, J., Kot, P., & Muradov, M., 2019. Review of Methods for Documentation, Management, and Sustainability of Cultural Heritage. Case Study: Museum of King Jan III's Palace at Wilanów. Sustainability, 11(24), 7046.